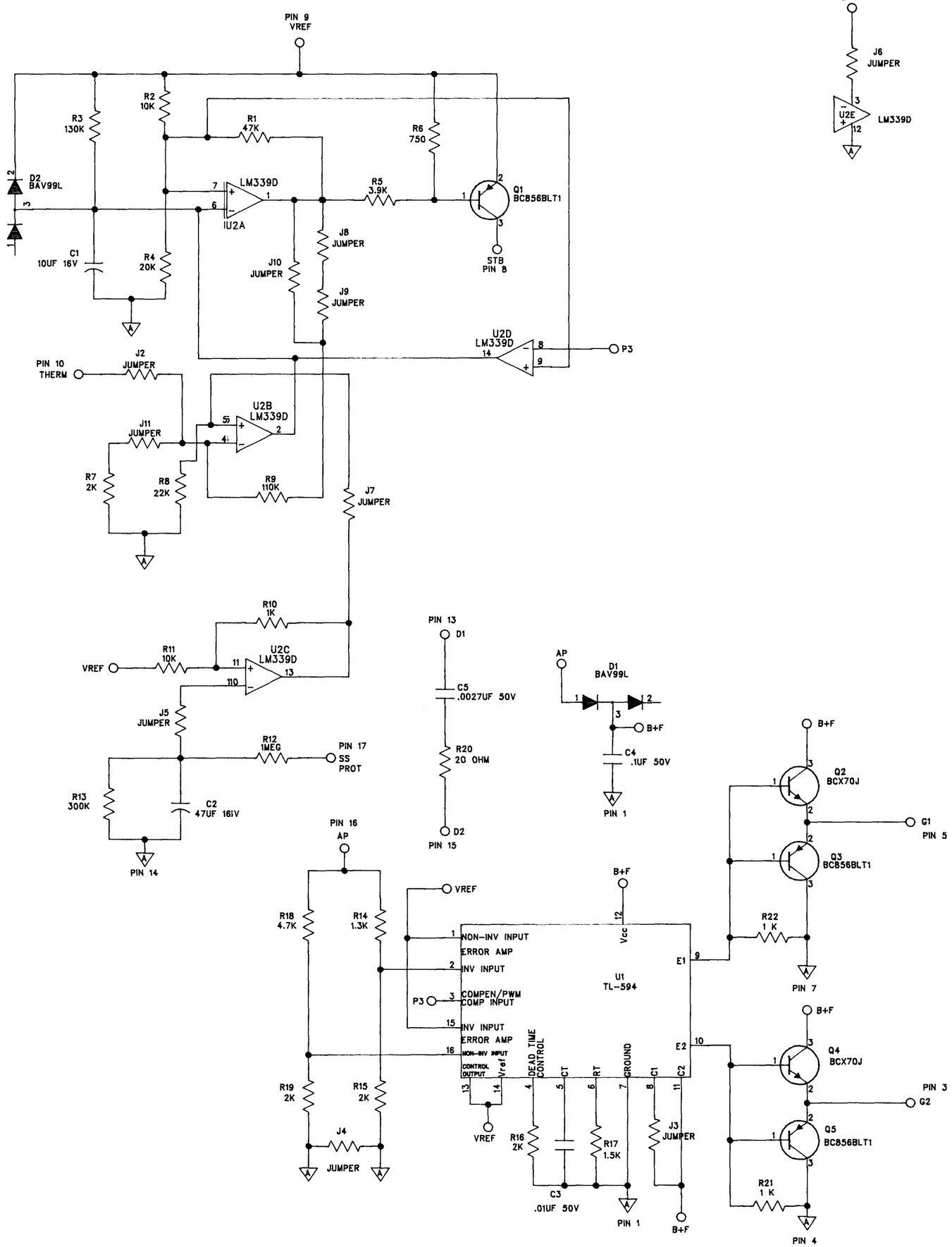

CORD	REV	REVISION RECORD	AUTHORITY	DATE	
	A	RELEASED REV A	S.C.	8-91	
	B	ECO 2273	W.C.	2-92	
	C	ECO 2568	W.C.	2-92	
	D	ECO 2633	W.C.	3-92	
	E	ECO 2705	W.C.	9-92	
	F	ECO 2976	W.C.	9-92	
	G	ECO 3029	W.C.	2-93	
	H	ECO 3085	WC	3-93	
	I	ECO 3100	WC	3-93	

NOTE:

ALL RESISTORS ARE 1/10W 5% SMD 0805 UNLESS SPECIFIED OTHERWISE

FOR REF DES J2, J6, J10, J11
DELETE RM/4-000C, ADD RM/10-000B (4)
PER ECO 2967

FOR REF DES D1, D2
PRIMARY PART # SS-2600SM BAV99L (2)
SECONDARY PART # SS-0427 BAV99GS08 (2)
PER ECO 3100

PRIMARY PART # SS-03100 BC856BLT1 MOT (3)
SUBSTITUTE PART SS-2110SM BCX71J MOT

CONFIDENTIAL

© Copyright 1993 Rockford Corporation. This drawing is the property of Rockford Corporation and embodies confidential information, trade secret information, and/or know-how which is the property of Rockford Corporation. By accepting this drawing, the recipient agrees not to provide, or otherwise make available, the drawing, or any information or know-how embodied therein, to any third party without prior written authorization.

DWN	CLIFFORD	6/8/91	ROCKFORD CORPORATION FOSGATE DIVISION TEMPE AZ		
CHK		3/19/93			
ENGR	CLIFFORD	6/8/91	TITLE SCHEMATIC SERIES ONE POWER SUPPLY FOR WP-PCS1PC		
APVD		3/22/93			
APVD		4/19/93	SIZE C	SCALE NONE	SHEET 1 OF 1
MATL FS			FILE NAME PCS1PC1	PART NO. SCH-S1P	REV I